K1352

Quarter-turn locks, stainless steel long version

Item description/product images

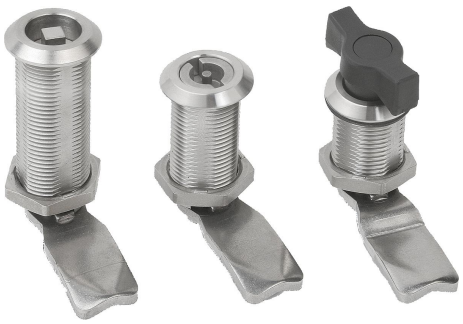

Description

Material:
Housing 1.4305 stainless steel.
Actuation and fastening nut 1.4404 stainless steel.
Tongue 1.4301 stainless steel.

Version:
Bright.

Note:
The quarter turn lock can be installed pre-assembled. For right or left use. Water and dust protected acc. to IP65 from DIN EN 60529.

Please order required tongue version separately. Every tongue can be combined with every housing.

Accessory:
Key K0535

Drawing reference:
Actuation:
a) square 7 mm
b) square 8 mm
c) double lug 3 mm
d) double lug 5 mm
e) wing grip

1) O-ring
2) flat seal

Drawings

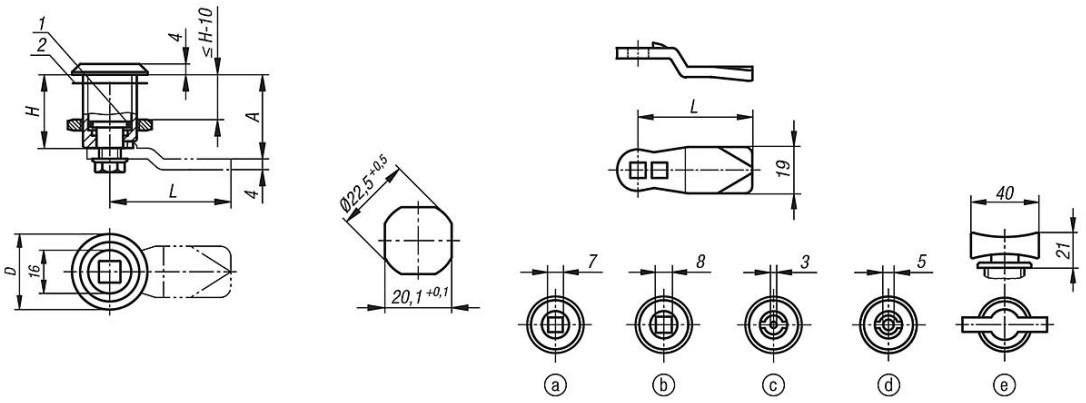

Overview of items

Quarter-turn locks, stainless steel, long version

Order No.	Actuation	D	H
K1352.1730	square 7 mm	28	30
K1352.1736	square 7 mm	28	36

Quarter-turn locks, stainless steel long version

Overview of items

Order No.	Actuation	D	H
K1352.1740	square 7 mm	28	40
K1352.1750	square 7 mm	28	50
K1352.1760	square 7 mm	28	60
K1352.1830	square 8 mm	28	30
K1352.1836	square 8 mm	28	36
K1352.1840	square 8 mm	28	40
K1352.1850	square 8 mm	28	50
K1352.1860	square 8 mm	28	60
K1352.4330	double lug 3 mm	28	30
K1352.4336	double lug 3 mm	28	36
K1352.4340	double lug 3 mm	28	40
K1352.4350	double lug 3 mm	28	50
K1352.4360	double lug 3 mm	28	60
K1352.4530	double lug 5 mm	28	30
K1352.4536	double lug 5 mm	28	36
K1352.4540	double lug 5 mm	28	40
K1352.4550	double lug 5 mm	28	50
K1352.4560	double lug 5 mm	28	60
K1352.0030	grip	28	30
K1352.0036	grip	28	36
K1352.0040	grip	28	40
K1352.0050	grip	28	50
K1352.0060	grip	28	60

Tongue for quarter-turn locks

Order No.	A for housing length H=30	A for housing length H=36	A for housing length H=40	A for housing length H=50	A for housing length H=60	L
K1340.45060	18	24	28	38	48	45
K1340.45080	20	26	30	40	50	45
K1340.45100	22	28	32	42	52	45
K1340.45140	26	32	36	46	56	45
K1340.45160	28	34	38	48	58	45
K1340.45180	30	36	40	50	60	45
K1340.45200	32	38	42	52	62	45
K1340.45220	34	40	44	54	64	45
K1340.45240	36	42	46	56	66	45
K1340.45260	38	44	48	58	68	45
K1340.45280	40	46	50	60	70	45
K1340.45320	44	50	54	64	74	45
K1340.45500	62	68	72	82	92	45

© HEINRICH KIPP WERK KG