Levelling feet caps

Item description/product images

Description

Material:
Polyethylene

Version:
black.

Note:
The caps protect the surface against scratch marks.

Drawings

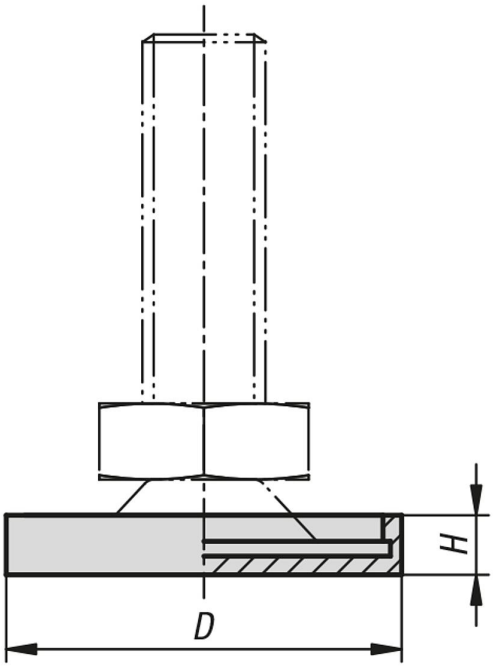

Overview of items

Levelling feet caps

Order No.	for foot plate Ø	D	H
K0679.1030	30	31,8	4,8
K0679.1060	60	62	6,8

© HEINRICH KIPP WERK KG