Knurled screws plastic

Item description/product images

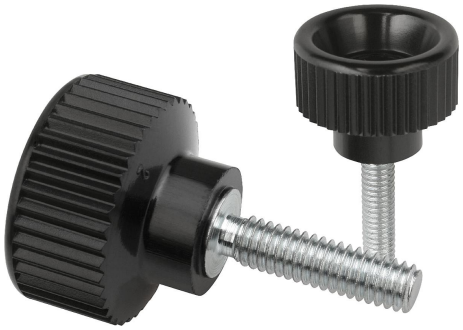

Description

Material:
Black thermoset PF 31.
Screw steel.

Version:
Screw electro zinc-plated.

Drawings

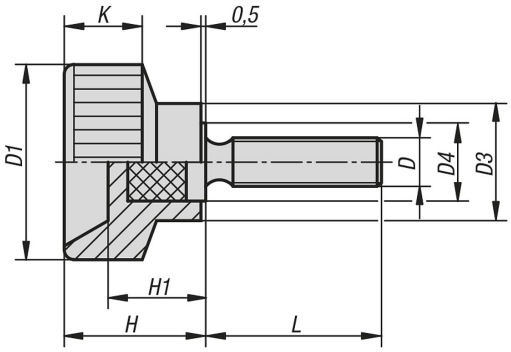

Overview of items

Knurled screws, plastic

Order No.	D	D1	D3	D4	H	H1	K	L
K0141.04X15	M4	18	10	7	13,5	9	8	15
K0141.04X20	M4	18	10	7	13,5	9	8	20
K0141.05X10	M5	20	12	8	14,5	10	8	10
K0141.05X18	M5	20	12	8	14,5	10	8	18
K0141.05X25	M5	20	12	8	14,5	10	8	25
K0141.06X20	M6	24	13	10	15	9,5	9	20
K0141.06X28	M6	24	13	10	15	9,5	9	28
K0141.08X25	M8	30	15	12	18	11	11	25
K0141.08X32	M8	30	15	12	18	11	11	32
K0141.10X30	M10	35	18	14	18,5	11	12	30

© HEINRICH KIPP WERK KG