Spring plungers with hexagon socket and thrust pin, stainless steel

Item description/product images

Description

Material:
Sleeve 1.4305.
Thrust pin 1.4034.
Spring 1.4310.

Version:
Bright.
Thrust pin hardened.

Drawing reference:
1) grub screw glued in

Drawings

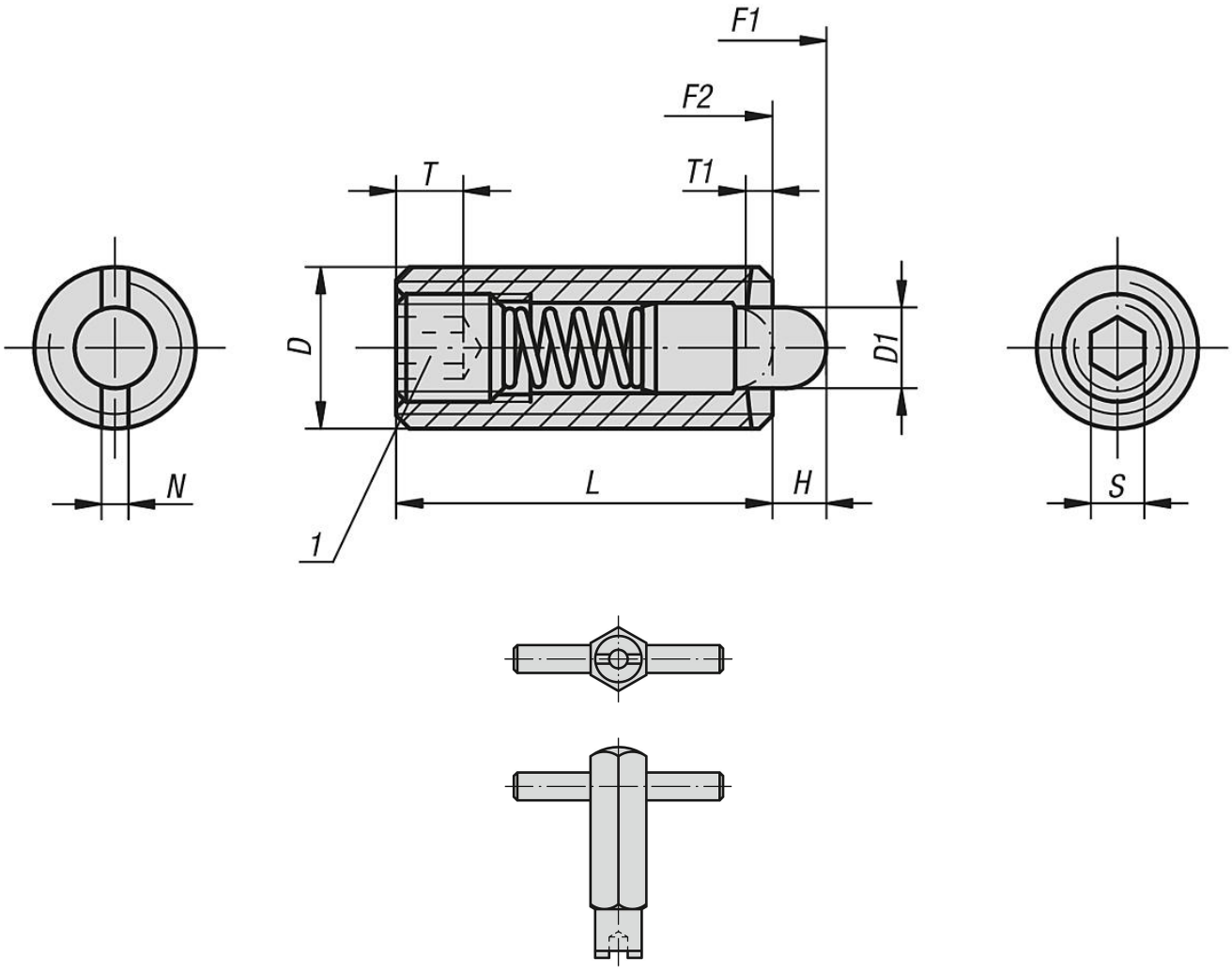

Overview of items

Spring plungers with hexagon socket and thrust pin, standard spring force

Spring plungers with hexagon socket and thrust pin, stainless steel

Overview of items

Order No.	D	D1	H	L	T	T1	N	S	Spring force initial pressure F1 approx. N	Spring force final pressure F2 approx. N	Order No. assembly key
K0319.03	M3	1	1,5	10	1,5	1	0,4	0,7	0,4	2,5	K0317.903
K0319.04	M4	1,5	1,5	15	2	0,6	0,6	1,3	5	16	K0317.904
K0319.05	M5	2,4	2,3	18	2	0,8	0,8	1,5	5	17	K0317.905
K0319.06	M6	2,7	2,5	20	2,5	1	1	2	6	17	K0317.906
K0319.08	M8	3,5	3	22	3	1,4	1,2	2,5	7	29	K0317.908
K0319.10	M10	4	3	22	3,5	1,4	1,6	3	8	31	K0317.910
K0319.12	M12	6	4	28	5	2	2	4	10	47	K0317.912
K0319.16	M16	7,5	5	32	6	2,5	2,5	5	38	85	K0317.916
K0319.205	M5	2,4	2,3	18	2	0,8	0,8	1,5	9	26	K0317.905
K0319.206	M6	2,7	2,5	20	2,5	1	1	2	11	35	K0317.906
K0319.208	M8	3,5	3	22	3	1,4	1,2	2,5	15	48	K0317.908
K0319.210	M10	4	3	22	3,5	1,4	1,6	3	15	58	K0317.910
K0319.212	M12	6	4	28	5	2	2	4	19	74	K0317.912

© HEINRICH KIPP WERK KG